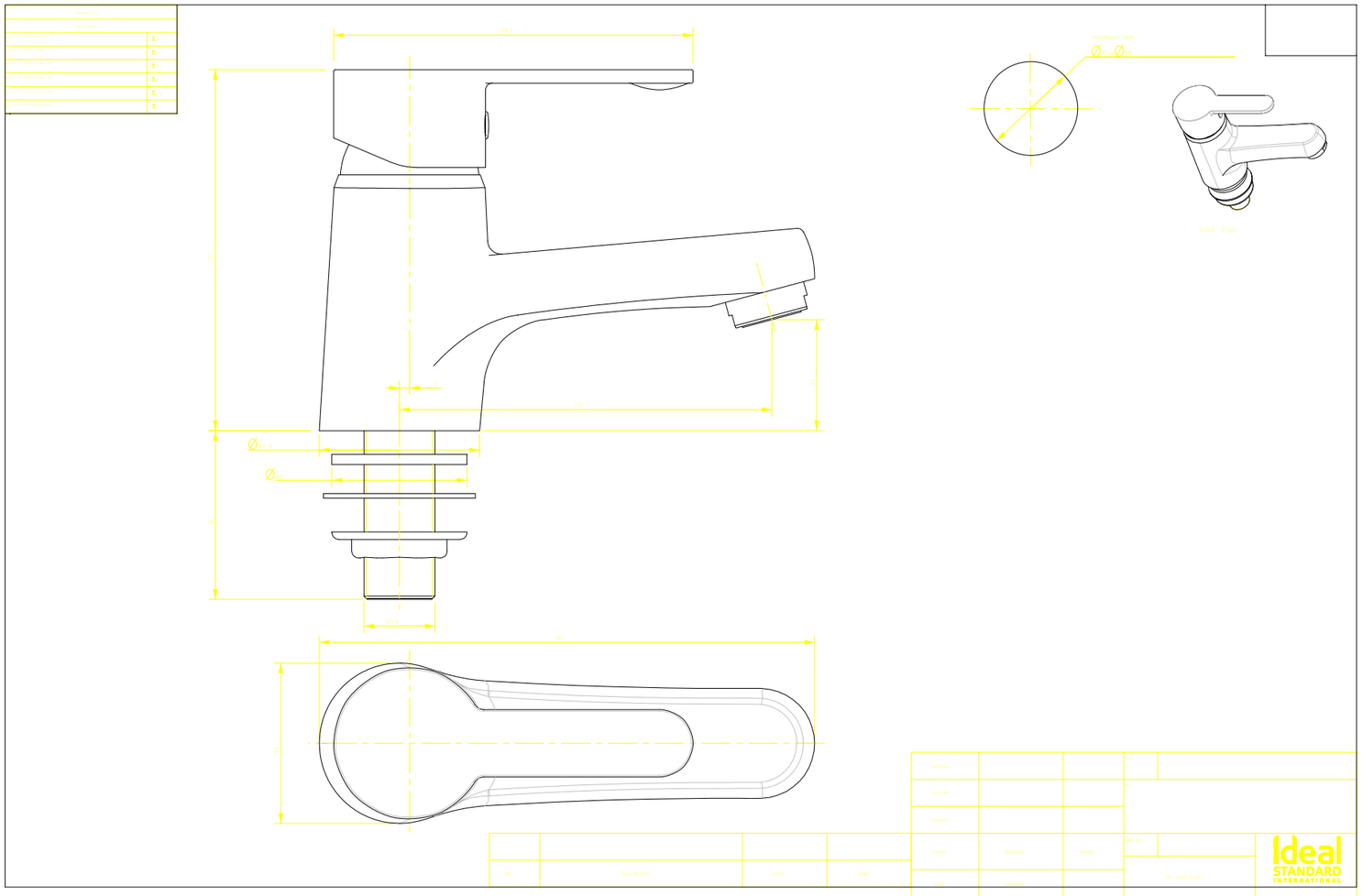
Installation hole
SCALE 0.400
Ideal
STANDARD
INTERNATIONAL