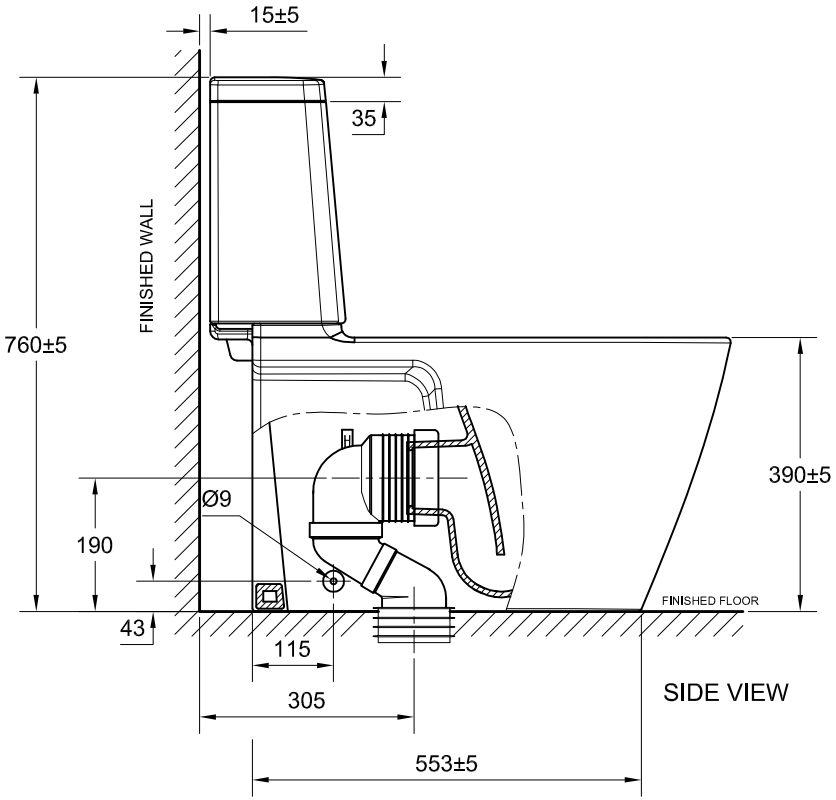

SIDE VIEW

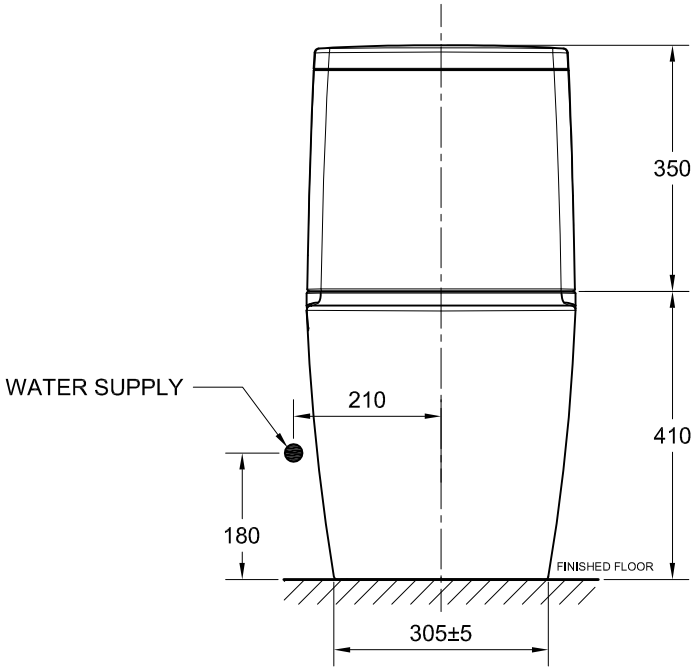

FRONT VIEW

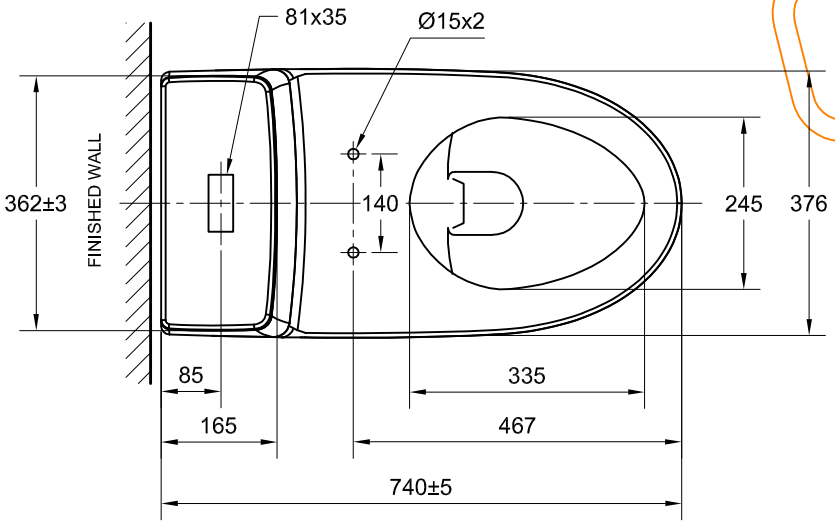

TOP VIEW

DRAFT

TF-2307 : TF-3307 Acacia E Bowl
TF-4307T Acacia E Tank
TF-4307C Acacia E Tank Cover

INDEX	DATE	REV.	MODIFICATION
E			
D			
C			
B			
A			

SHEET No. 1/1	DESCRIPTION	TF-2307 Acacia E CC Bowl Toilet	
DESIGNED BY	I.Dhanyadhorn		DRAWING No. XXXXXXX-XX
DRAW BY	S.Arnont		REVISION 00
CHECKED BY	N.Chaipas		DATE Feb 28/2014
APPROVED BY	A.Patthanasin		SCALE FIT ON SCALE
TOLERANCE	>75mm. ±2%, ≤75mm. ±5%		PRODUCT TYPE Bowl

This document is the property of LIXIL (Thailand) Public Company Limited, it can neither be reproduced, nor communicated, without their authorization.